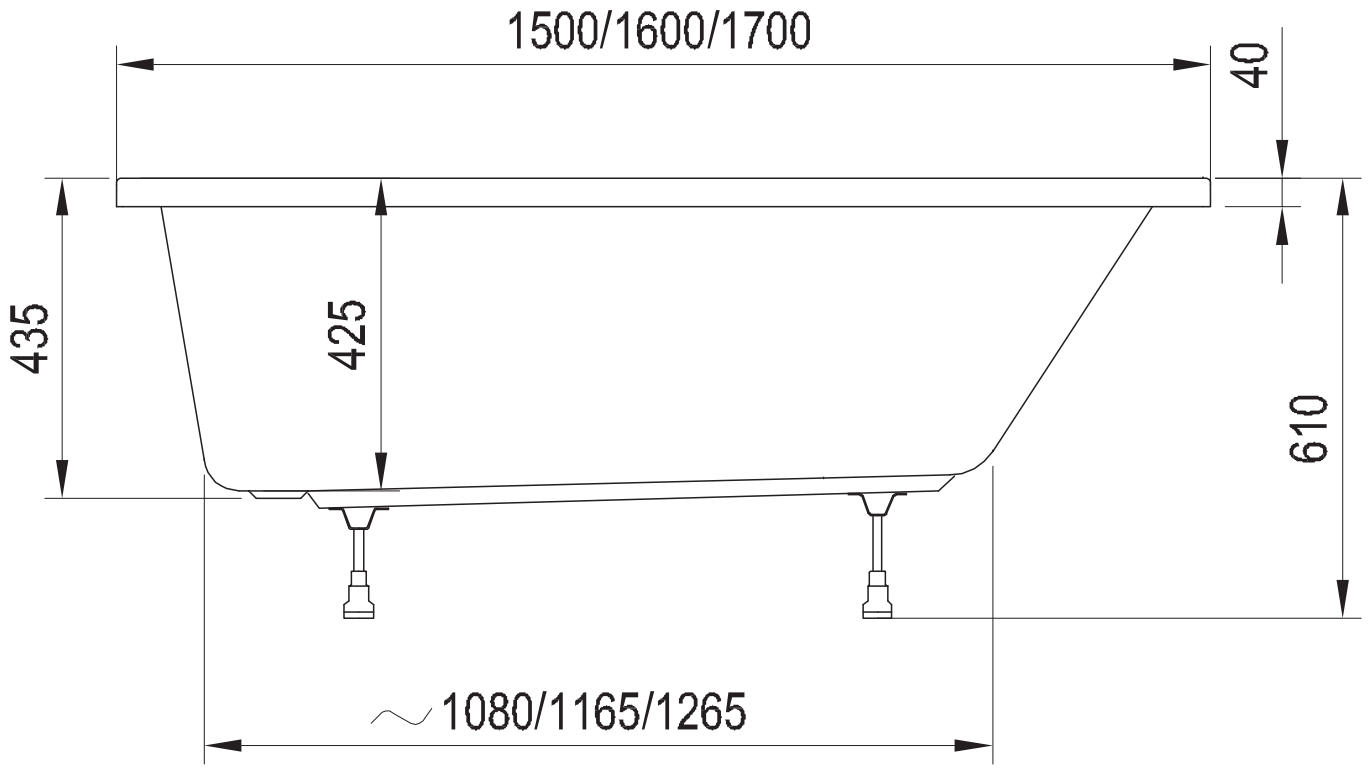
1500/1600/1700
40
435
425
610
~1080/1165/1265

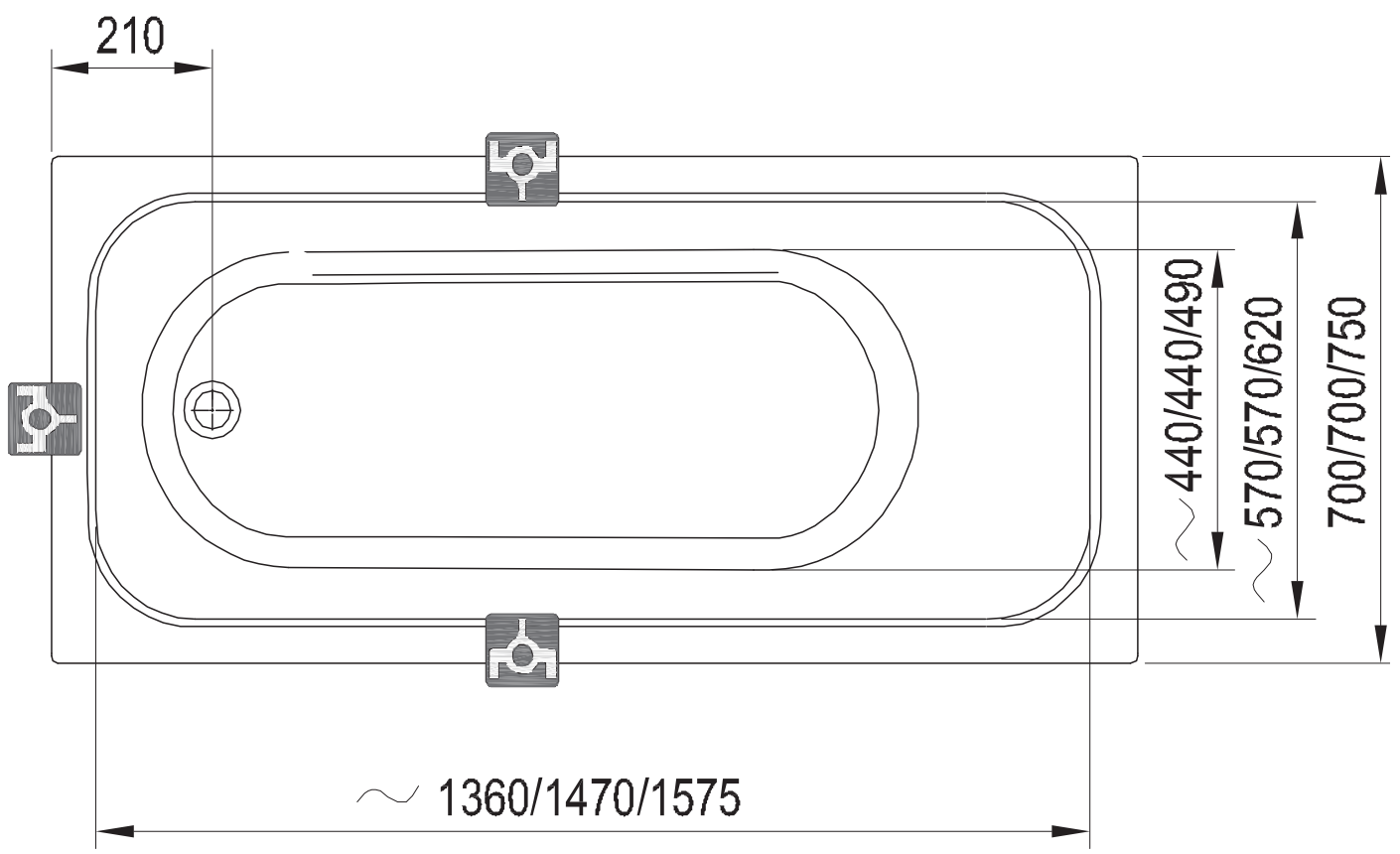
210
~440/440/490
~570/570/620
700/700/750
~1360/1470/1575