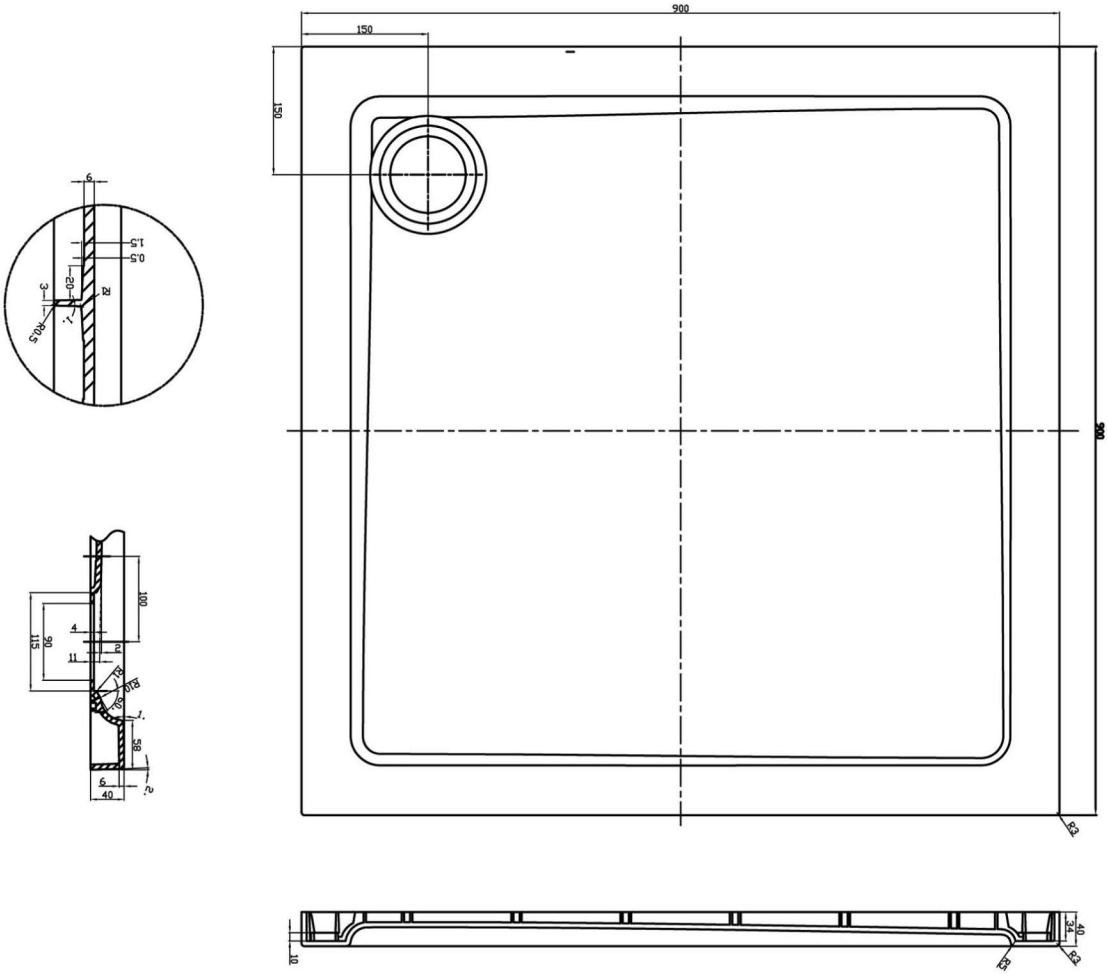
900
150
150
900
R3
6
1.5
0.5
20
3
R0.5
100
90
115
4
2
11
R10
58
6
40
10
34
40
R3
R3

RS285