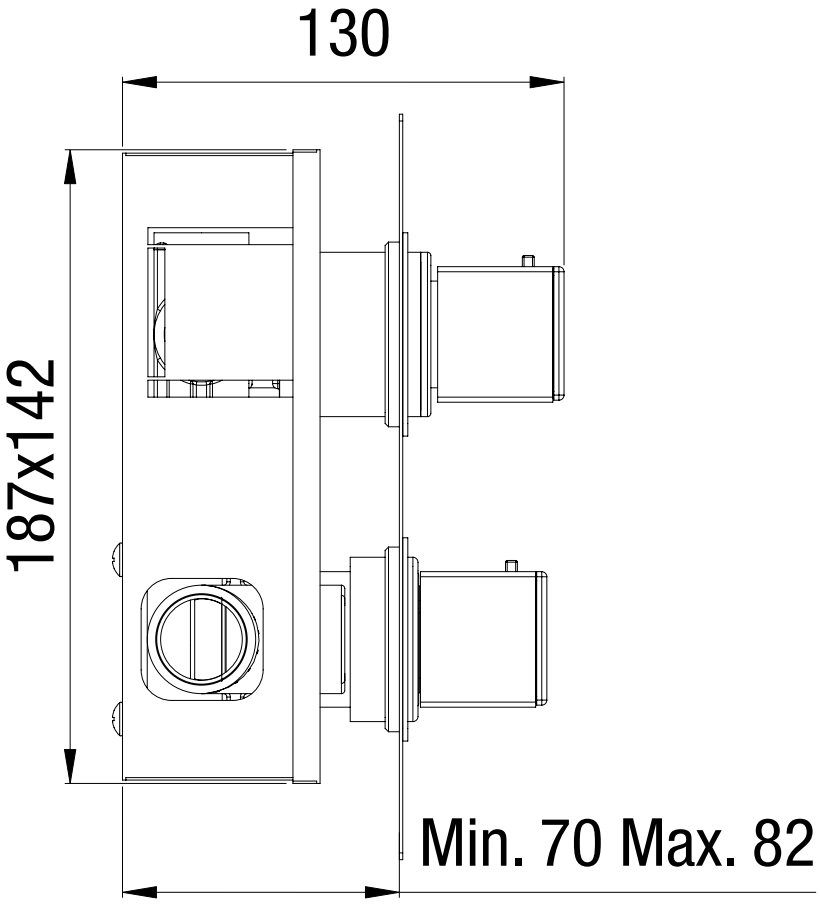
130
187x142
Min. 70 Max. 82

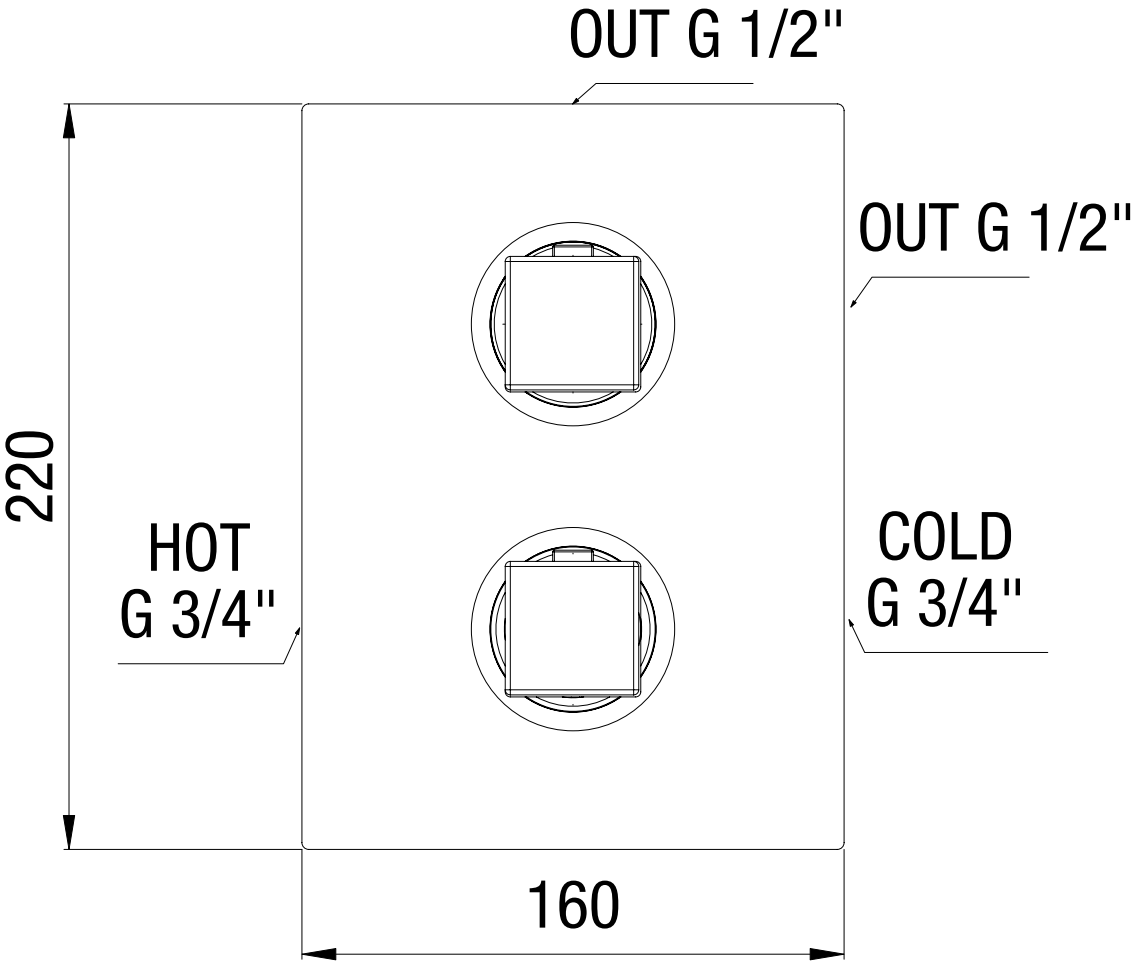
OUT G 1/2"
OUT G 1/2"
220
HOT
G 3/4"
COLD
G 3/4"
160